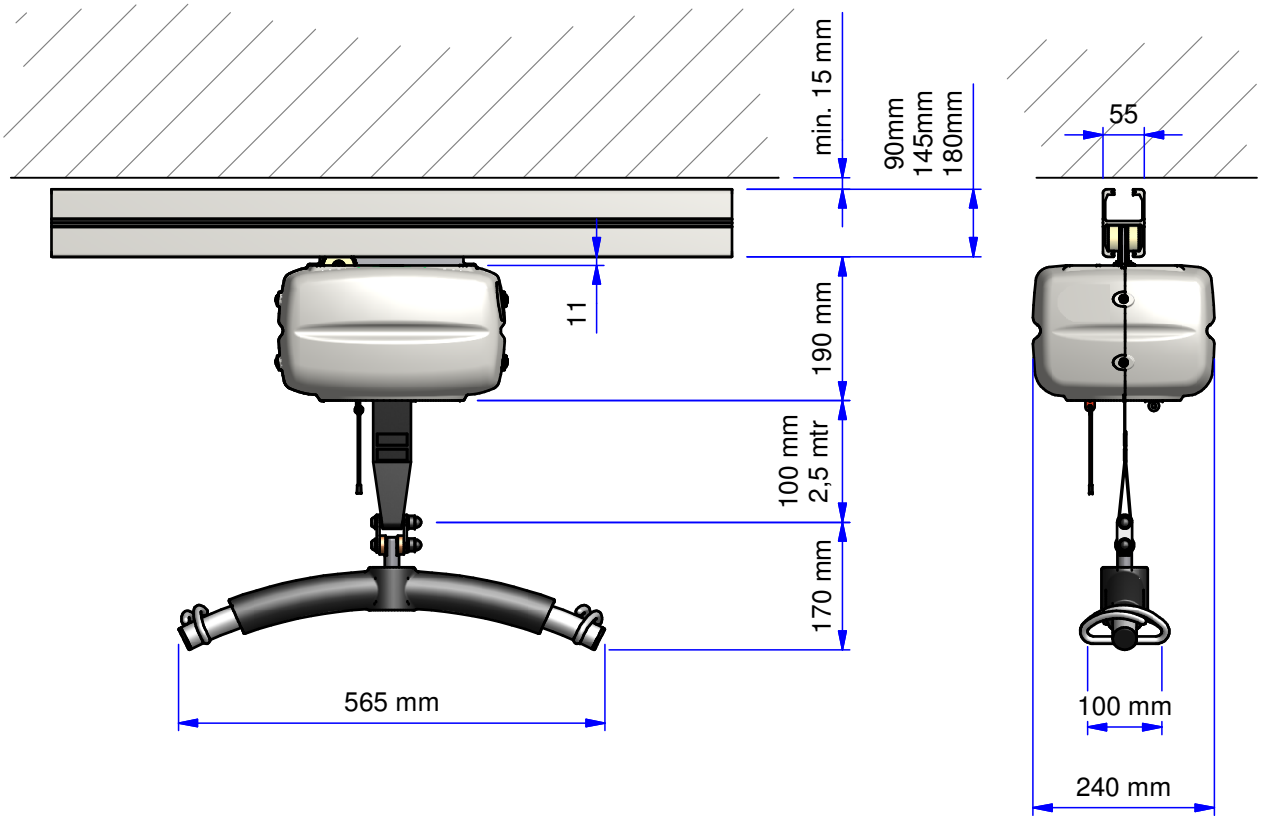
min. 15 mm
90mm
145mm
180mm
55
11
190 mm
100 mm
2,5 mtr
170 mm
565 mm
100 mm
240 mm