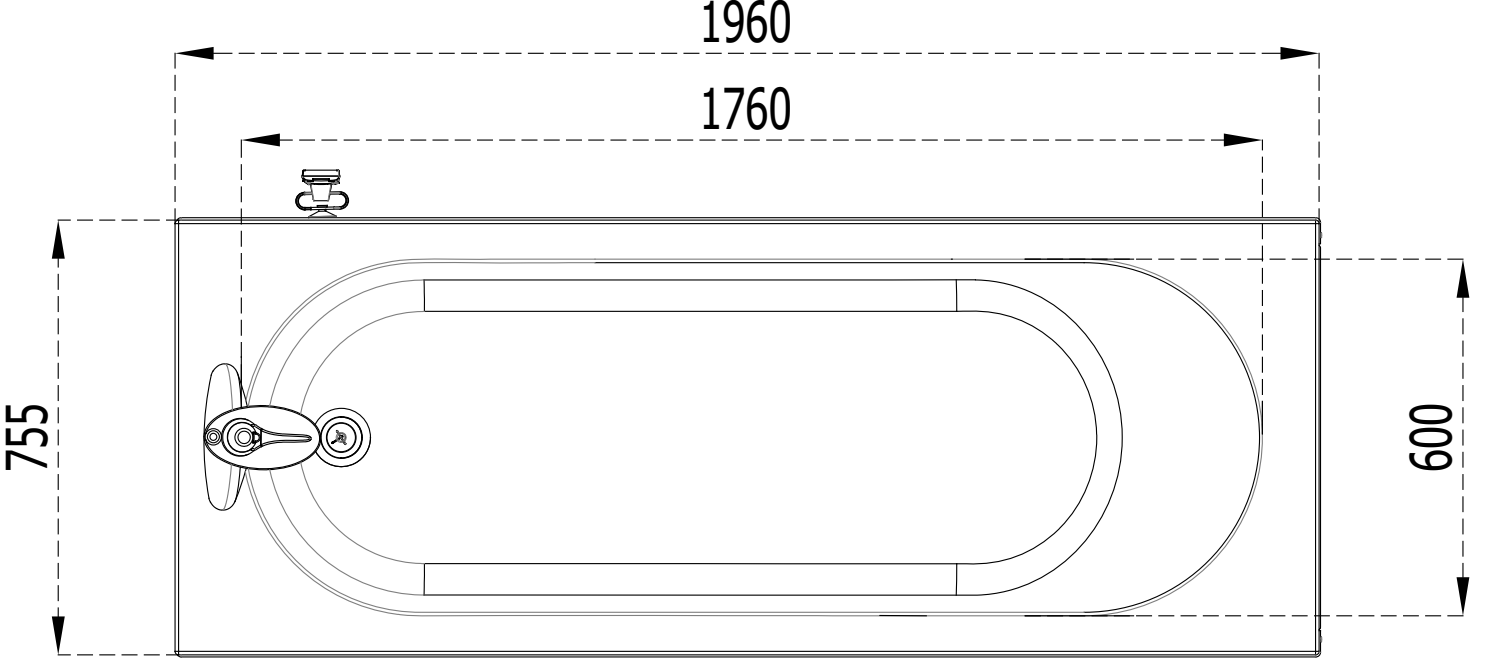
1960
1760
755
600

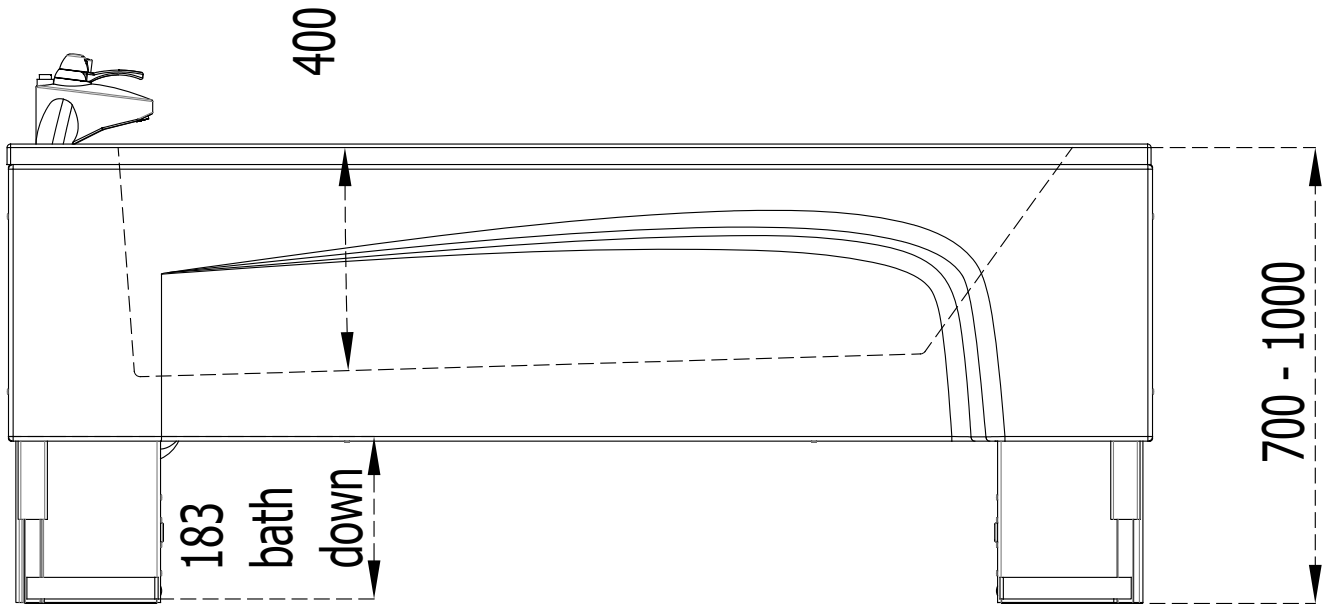
400
700 - 1000
183
bath
down