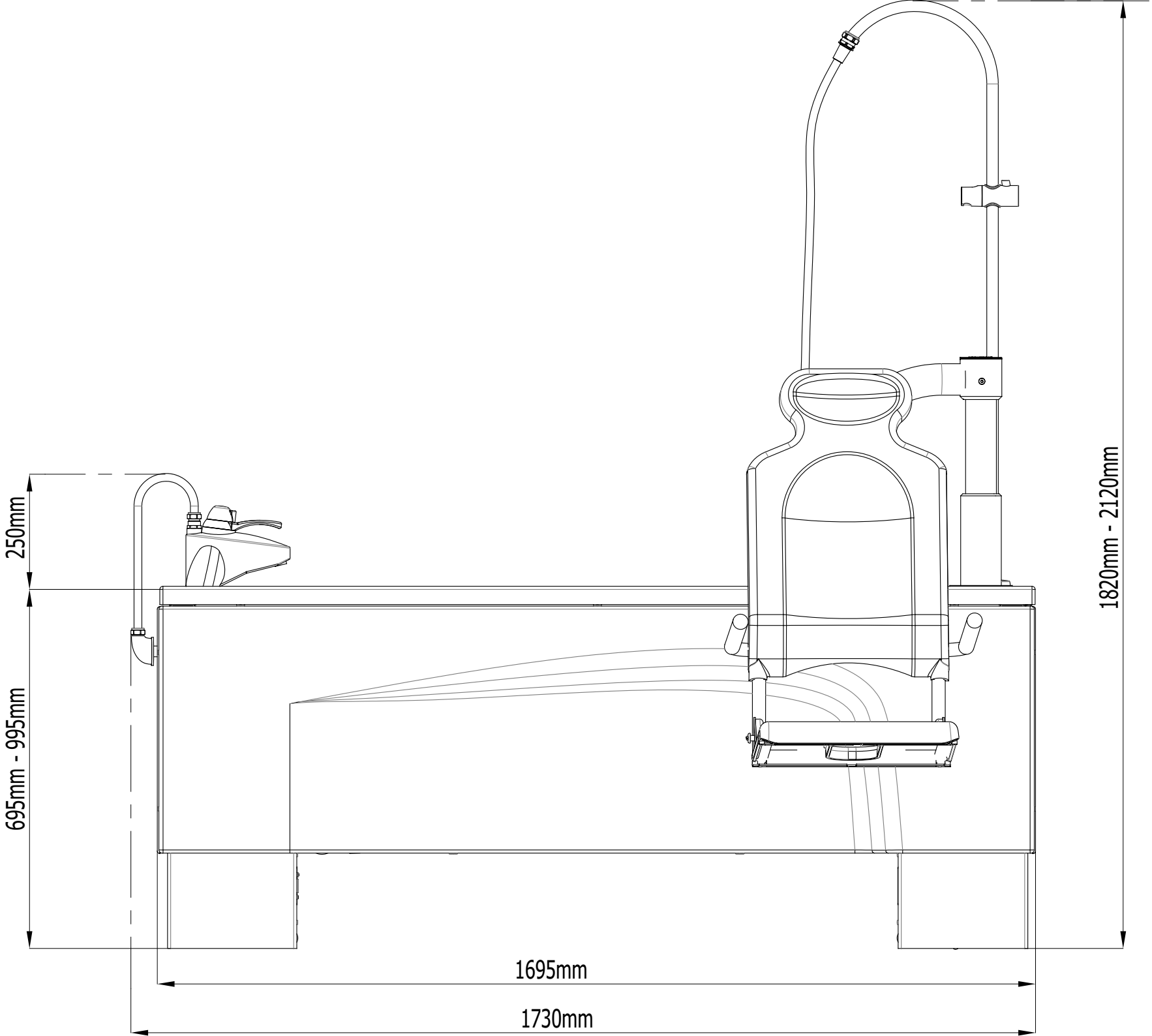
250mm
695mm - 995mm
1820mm - 2120mm
1695mm
1730mm